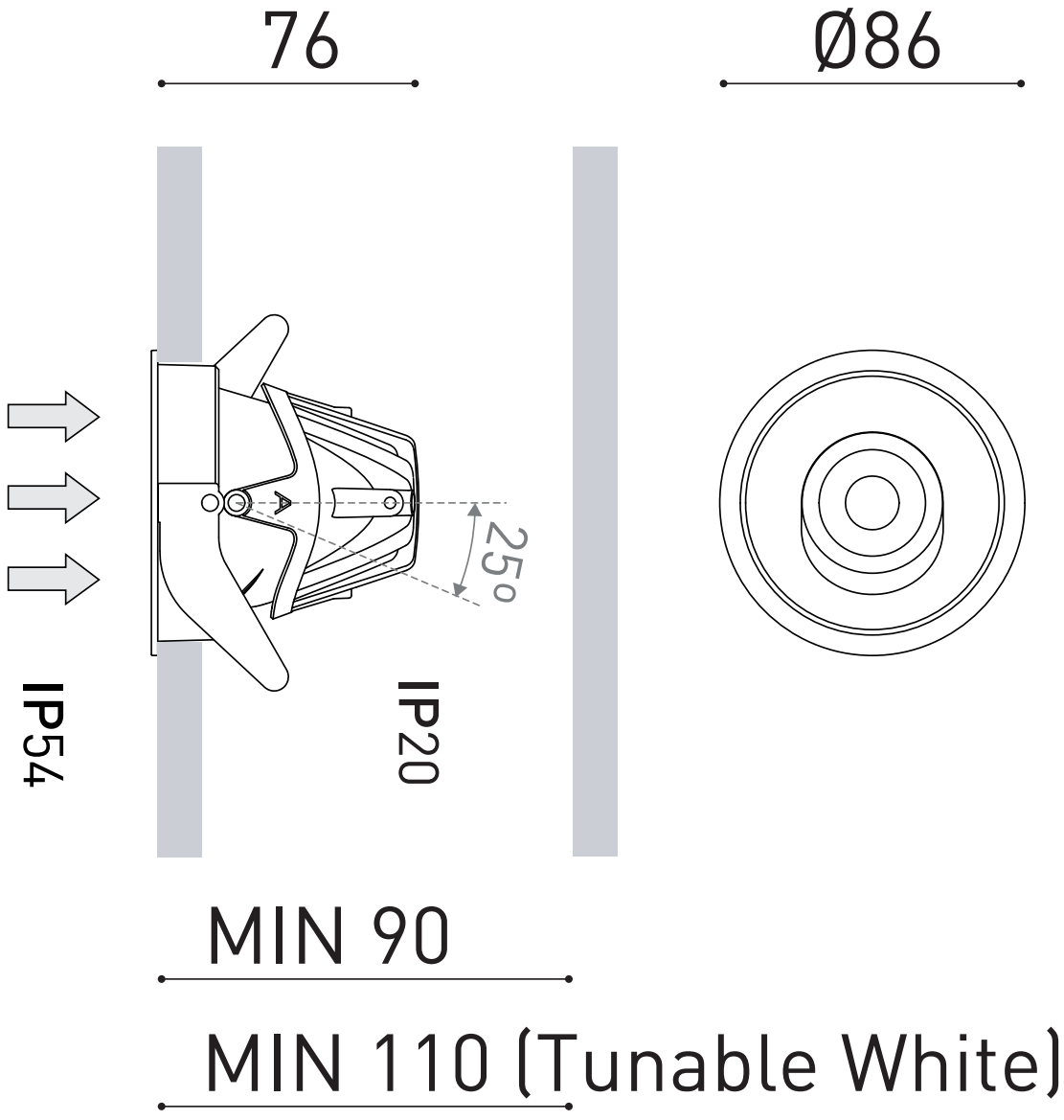
Ø86
76
25°
IP20
IP54
MIN 90
MIN 110 (Tunable White)